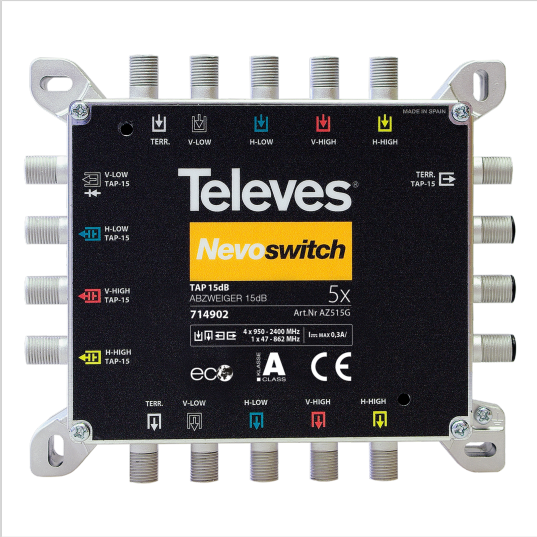

Televes reserves the right to modify the product

NevoSwitch tap 5 inputs 15dB

NevoSwitch tap equipped with 5 inputs (one terrestrial and the four polarities of one satellite), with 15 dB bridging losses, that allows the balancing of the signals received by each user.

Ref.714902

Art.Nr	AZS515G
EAN13	8424450173411

Highlights

- Current circulation in all inputs and all outputs with DC bypass
- Current circulation in the vertical low (VL) bypass and terrestrial output
- Low through losses

Main features

- Very compact
- Made of zamak
- Input and output colour identification
- Passive element that does no require power feeding

Application example

(Click to see the picture)

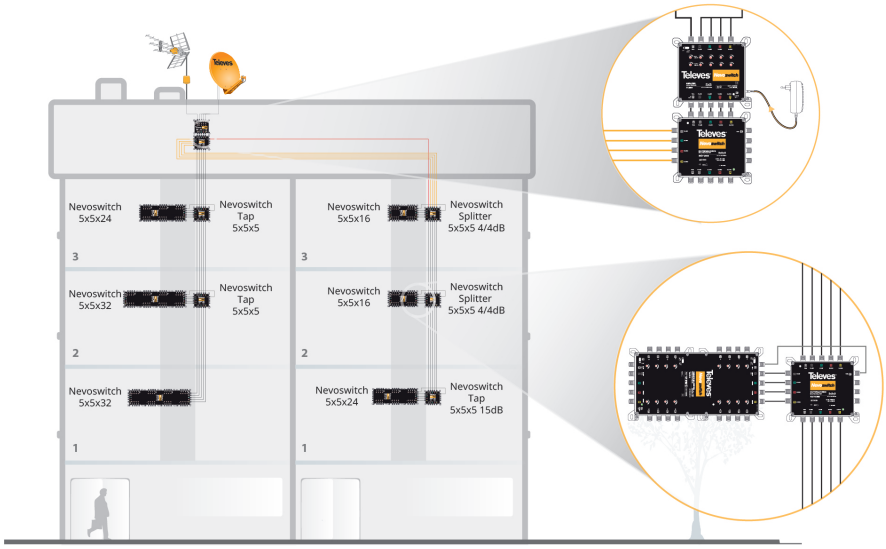

Technical specifications

Number of inputs		5
Number of cascadable outputs		5
Number of user outputs		5
Frequency range TERR.	MHz	47 ... 862
Frequency range SAT.	MHz	950 ... 2400
Through losses TERR.	dB	1.5
Through losses SAT.	dB	1.5
Tap losses TERR.	dB	15
Tap losses SAT.	dB	17
Isolation H/V	dB	> 25
Isolation users	dB	> 25
DC pass		In□Out / Tap□In/Out
Connectors		"F" type
Operating temperature	°C	-5 ... 45
Protection index (IP)		20